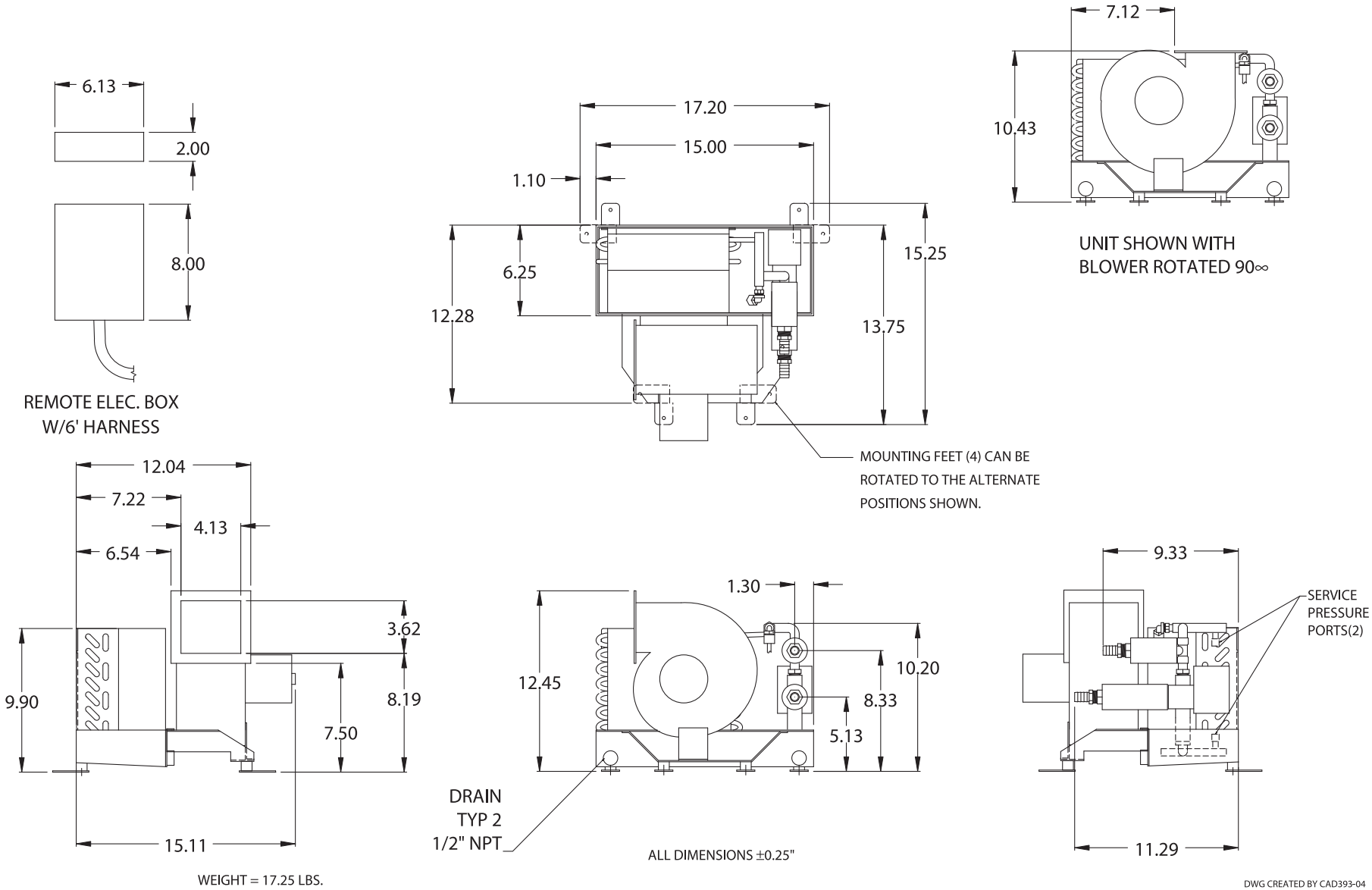

REV	DATE	REVISION DESCRIPTION	DWG	APR
A	8/17/04	REVISED TOLERANCE,REVISED TITLE,CAD570-04	DRR	JES
B	1/27/05	REMOVED MARINE AIR,CAD082-05	DRR	JES

Dometic Corporation

AT6F
AIR HANDLER

DATE: 6/25/04	DWG BY: DRR	PART NUMBER: TBD	DWG H3020095 REV B
SCALE: 1:8	APR BY: JES		