DWG CREATED BY CAD417-04

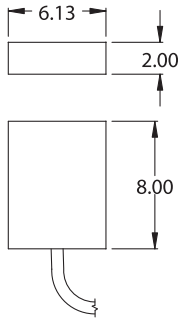

REMOTE ELEC. BOX
W/6' HARNESS

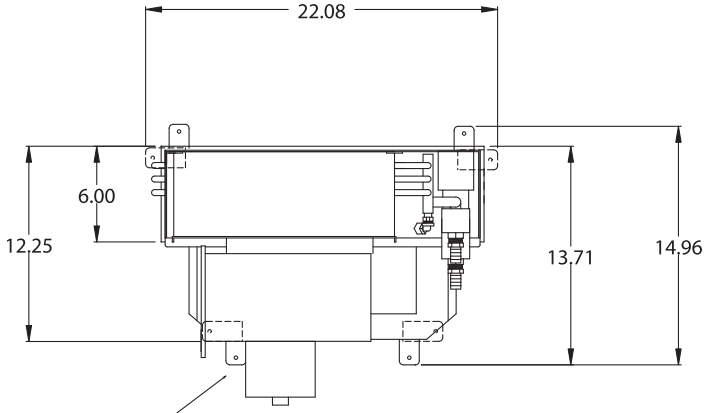

MOUNTING FEET (4) CAN BE ROTATED TO THE ALTERNATE POSITIONS SHOWN.

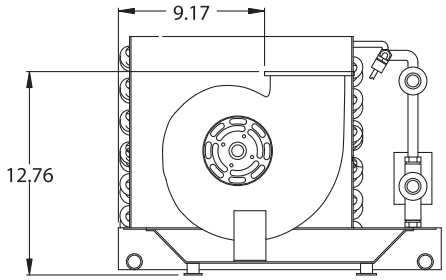

SHOWN WITH BLOWER ROTATED 90∞

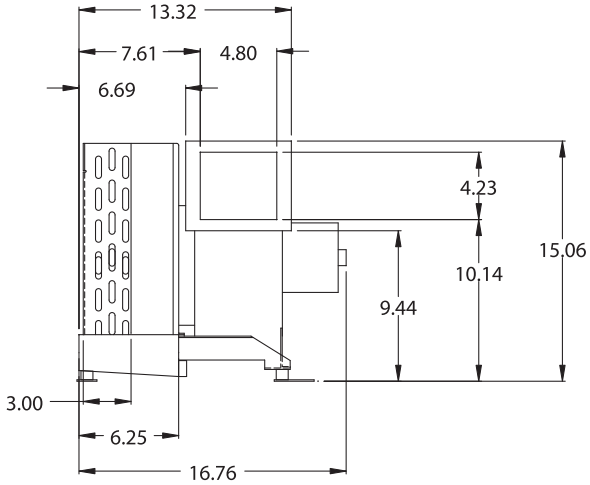

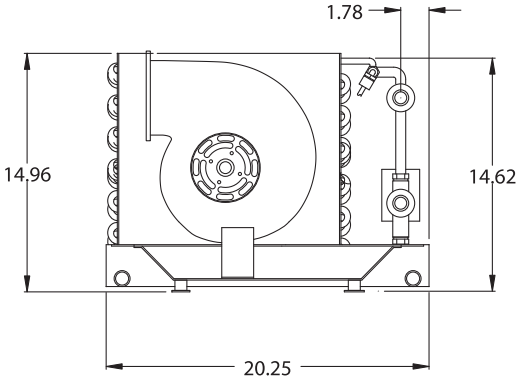

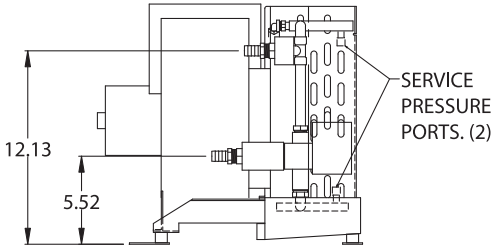

ALL DIMENSIONS ±0.25"

WEIGHT = 30.5LBS.

REV	DATE	REVISION DESCRIPTION	DWG	APR
A	6/30/04	ADDED BLOWER DIM IN ROTATED VIEW,CAD446-04	DRR	JES
B	8/18/04	REVISED TITLE FROM AT18FZ,ADDED TOL,CAD576-04	DRR	JES
C	1/27/05	REMOVED MARINE AIR,CAD082-05	DRR	JES

Dometic Corporation

AT18F
AIR HANDLER

DATE: 6/22/04	DWG BY: DRR	PART NUMBER: TBD	DWG H3020094	REV C
SCALE: 1:12	APR BY: JES			