◆ Dimensions Drawing

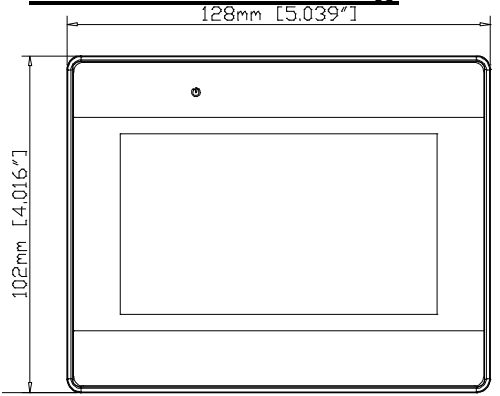

Front View

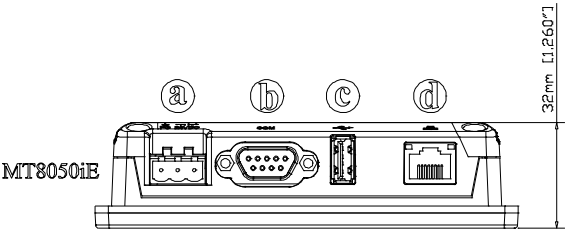

Bottom View

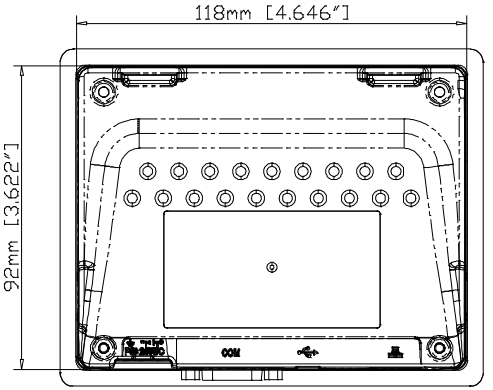

Rear View

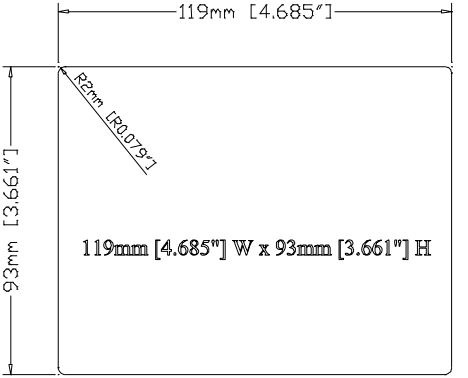

Cutout Dimensions